WC6 SERIES
Split-Core Current Transformers

WC6 Series has long rectangular ID, making suitable for high load and large bus-bar applications. Accessible from either sides allow electricians to open/close easily during metering & energy management installations and retrofits without dismantling power-line. This CT has WC's trademark ergonomic secured 2D-Latch™ feature along with locking and servicing date tag provisions. Install with confidence from made in America design, quality and assembly!

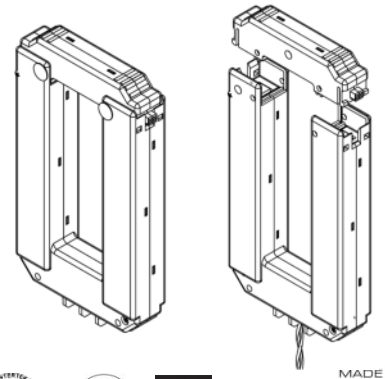

MECHANICAL

Window Size	2.0" x 5.5" [50.8mm x 139.7mm]
Wire Leads	6ft [1.8m] 18AWG black/white twisted UL1015 105°C 600V
Operating Temperature	-15°C to 80°C (90% Rel. Hum.)
Altitude	6,600ft [2012m]
Weight	2.5Lbs [1.1Kg]
Keying Hole	Plastic rivets for locking or date tag
Ergonomic	Arc-Latch™ for EZ-Open, no tool

ELECTRICAL

Primary Input (max.)	2000A, AC Sine-wave 50/60Hz
Secondary Output	0.333VAC, full-scale
Accuracy (typical)	0.5%
Linearity	10% - 120%
Polarity	White (X1—Hi), Black (X2—Low)
Phase Direction	Arrow points toward Load
Frequency	40-400Hz

REGULATORY STANDARDS

Voltage Rating	600V AC, BIL 10KV AC Full-wave
Construction	UL94V-0 flame retardant plastic, CATIII
	Double insulations (optional)
Standards	UL2808, ANSI C57.13 & IEC61010-1 CSA C22.2 61010-1-12 & CE Mark

INSTALLATION

For indoor use only. Turn off power source before working on CTs. Observe X1X2 polarity and read manufacture's instructions of the equipment you are connecting to CTs for proper installation guide. Professional installations required for safe handling and operation.

MODELS

MODEL	RATIO*	ACCURACY
WC6-0800-MV333	800A/0.333mV	0.5
WC6-1200-MV333	1200A/0.333mV	0.5
WC6-1600-MV333	1600A/0.333mV	0.5
WC6-2000-MV333	2000A/0.333mV	0.5

*Custom ratio outputs available in mV, V & mA

DIMENSIONS [mm]

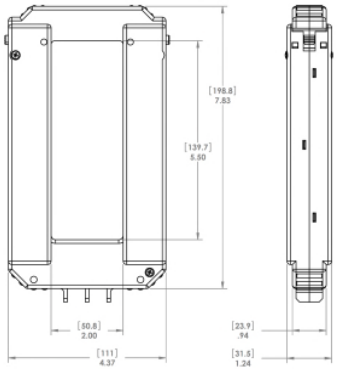

SCHEMATIC

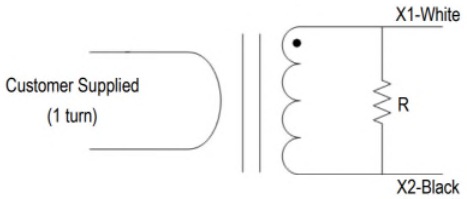

WATTCORE INC | Core Solutions for Energy Management™
6208 Oakton Street
Morton Grove, IL 60053 (USA)
571.482.6777 | sales@wattcore.com | www.wattcore.com

DANGER

De-energize source before installation! Observe local and national electrical codes for safety and compliance. Licensed electricians required. Use precaution when working with electricity!